9th International Conference on Applied Engineering and Natural Sciences
April 06-07, 2026: Konya, Turkey

© 2026 Published by All Sciences Academy https://www.icaens.org/

Hybrid EDFA-Raman Amplification with DCF-Based Dispersion Management: A Dual-Rate Performance Study for Long-Haul C-Band WDM Transmission

Sangram Phadtare*, Shivam Arali*, Siddhant Sinha*, Pranjay Kalra*, Hritam Shrivastava*

*School of Electronics Engineering, Vellore Institute of Technology, Vellore, Tamil Nadu, India

sangramp2794@gmail.com

Abstract – *Escalating bandwidth requirements in metropolitan and long-haul optical networks have made 25 Gbps per-channel operation an urgent infrastructure priority, yet the attendant tightening of optical signal-to-noise ratio (OSNR) margins and heightened chromatic dispersion sensitivity introduce physical-layer constraints absent at 10 Gbps. This paper quantifies the channel-resolved performance of two amplification architectures—lumped EDFA-only and hybrid EDFA-Raman—applied to a four-channel NRZ-OOK C-band wavelength-division-multiplexed (WDM) system under multi-span, per-span dispersion-compensated conditions. OptiSystem simulations employing the split-step Fourier method were executed over a 480 km three-span link at 10 Gbps and a 500 km four-span link at 25 Gbps. At 10 Gbps, two channels breach the* $Q = 6$ *forward error correction (FEC) boundary under EDFA-only gain, whereas the hybrid configuration restores all channels above threshold with a peak Q-factor gain of 2.934 and a nine-decade BER improvement. The 25 Gbps scenario yields similar results: three of four channels fall below the FEC limit under lumped amplification, yet the hybrid topology again achieves full FEC compliance with a peak gain of* $\Delta Q = 2.982$

Keywords – EDFA-Raman hybrid amplification, WDM, dispersion compensating fiber, ASE noise, Q-factor, BER, long-haul optical transmission, NRZ-OOK, OSNR, 25 Gbps

I. Introduction

Optical transport networks carrying internet backbone traffic continue to face accelerating capacity demands driven by video streaming, cloud services, and machine-to-machine communication [1]. The incumbent 10 Gbps per-channel design point, originally adequate for regional interconnects, is now routinely saturated, motivating migration to 25 Gbps. The transition is, however, non-trivial from an amplifier engineering perspective. Chromatic dispersion penalty scales quadratically with bit rate: a 25 Gbps signal propagating over standard singlemode fiber (SMF-28) accumulates approximately 6.25 times the dispersion-induced inter-symbol interference (ISI) of its 10 Gbps counterpart across an identical span [4]. Dispersion compensating fiber (DCF), although effective as a linear equaliser, introduces additional insertion loss that must be recovered by supplementary optical gain stages, each of which injects amplified spontaneous emission (ASE) noise into the transmission bandwidth. Erbium-doped fiber amplifiers (EDFAs) constitute the standard gain medium in deployed C-band WDM infrastructure owing to their flat gain profile, low noise figure, and broad compatibility with multiplexed channel plans [2]. Over multispan links, however, cascaded EDFAs accumulate ASE in a manner that degrades the optical signal-to-noise ratio (OSNR) progressively, eventually driving the weakest channel below the FEC acceptance threshold before the target reach is realised [3]. This limitation is particularly pronounced at 25 Gbps, where the reduced bit period narrows the permissible noise margin. Distributed Raman amplification offers a complementary mechanism that partially mitigates this constraint. Stimulated Raman scattering (SRS) within the transmission fiber itself transfers energy from a shorter-wavelength pump to the signal band, depositing gain continuously over the span rather than concentrating it at a discrete lumped stage [5]. The resulting elevation in average in-span signal power reduces the effective noise figure of the composite amplifier chain and suppresses ASE accumulation [6]. Hybrid architectures that combine distributed Raman pre-gain with lumped EDFA post-gain have been experimentally validated across C-band and extendedband WDM systems and shown to improve OSNR by 3–6 dB relative to EDFA-only baselines, depending on pump power and span length [7]. Published comparative studies

addressing both 10 Gbps and 25 Gbps bit rates on identical multi-span, dispersion-managed links are scarce. Investigations such as those in [8] established the theoretical noise-figure advantage of distributed Raman gain but did not extend the analysis to the 25 Gbps regime. Recent numerical studies [9], [10] reported Q-factor gains of 1–2 dB for single- or dual-span hybrid configurations at 10 Gbps, yet the multi-span noise compounding characteristic of long-haul links was not systematically captured. The current work addresses this gap through a channel-resolved, dualbit-rate simulation campaign that isolates the performance boundary between EDFA-only and hybrid amplification under conditions directly relevant to operational network planning. Distinct contributions relative to existing literature are as follows.

- Channel-resolved Q-factor and BER evaluation across all four C-band channels at both 10 Gbps (480 km, three spans) and 25 Gbps (500 km, four spans), enabling direct identification of failure modes specific to each bit rate.
- Quantitative ASE noise pedestal suppression characterisation via optical spectrum analysis, establishing the headroom available for future channel-count scaling.
- Span-length sensitivity analysis at 25 Gbps that maps the FEC compliance boundary for both topologies, providing actionable guidance for repeater spacing decisions.
- A consolidated cross-rate performance table enabling direct assessment of amplifier topology trade-offs as a function of bit rate.

Section II details the system model and simulation methodology. Section III presents and analyses results. Section IV summarises principal findings and future directions.

II. System Model and Simulation Methodology

A. Simulation Environment

All numerical experiments were carried out in OptiSystem™ v22 (Optiwave Systems Inc.) [12]. The propagation engine solves the generalised nonlinear Schrodinger equation (NLSE) via the split-step Fourier method (SSFM) with adaptive step sizing, simultaneously capturing chromatic dispersion, self-phase modulation (SPM), and spontaneous emission from each gain element [1]. A global simulation bandwidth of 320 GHz was allocated to prevent spectral wrap-around artefacts. Bit sequences of length 2^{10} were generated using a pseudo-random binary sequence (PRBS) generator, yielding statistically stable eye patterns and Q-factor estimates at each operating point.

B. Channel Plan

Four continuous-wave (CW) carriers were placed on the ITU-T G.694.1 100 GHz frequency grid spanning 1550.0–1552.4 nm (C-band), with 0.8 nm inter-channel spacing. Each carrier was modulated with NRZ-OOK at an extinction ratio of 30 dB and launched into the fiber plant at +5 dBm per channel. The aggregate channel plan occupies a 2.4 nm optical window, which lies well within the 3 dB gain bandwidth of both the EDFA and the co-pumped Raman stage, ensuring comparable amplification across all channels.

C. Fiber Plant and Dispersion Management

SMF-28 fiber (Corning) characterised by attenuation $\alpha = 0.2$ dB/km and group-velocity dispersion coefficient $D = 16.75\,\mathrm{ps(nm{\cdot}km)^{-1}}$ at 1550 nm served as the transmission medium for all spans. A DCF module with $D_{\mathrm{DCF}} = -80\,\mathrm{ps(nm{\cdot}km)^{-1}}$ was inserted at the output of each transmission span; its physical length was optimised to reduce residual dispersion to below ±1 ps/nm per span. The 32 dB insertion loss of the DCF spool was recovered by a low-noise EDFA (gain = 5 dB, noise figure = 4 dB) positioned immediately downstream of the compensating module, ahead of the next transmission span. Two link configurations were evaluated:

- **10 Gbps link:** Three uniform spans of 160 km each (total: 480 km).
- **25 Gbps link:** Four spans of 150 km + 150 km + 150 km + 50 km (total: 500 km).

D. Amplification Architectures

Architecture A – EDFA-Only: A single lumped EDFA with 32 dB gain and 4 dB noise figure was positioned at the input of each main transmission span. This replicates the amplification topology common in installed long-haul WDM infrastructure and serves as the baseline reference.

Architecture B – Hybrid EDFA-Raman: An additional co-propagating Raman pump at 1450 nm (+30 dBm launch power) was injected into the transmission fiber ahead of the lumped EDFA at each span. The 1450 nm pump wavelength places the peak Raman gain band at approximately 1550 nm via a nominal 100 nm Stokes shift, covering the full 13 THz Raman gain bandwidth of silica fiber [5]. Distributed Raman gain raises the average in-span optical power, reducing the effective noise figure of the EDFA that follows. Forwardpump Raman configurations are susceptible to pump relativeintensity noise (RIN) transfer onto the signal [6]; this secondorder effect was not included in the present model, and backward-pumped topologies are deferred to future investigation.

E. Receiver Model

A fourth-order Bessel optical bandpass filter with 3 dB bandwidth of 15 GHz demultiplexed each channel before detection by a PIN photodiode. Q-factor values were derived from eye-diagram statistics, and BER was computed from the standard Gaussian approximation [3]:

$$\mathrm{BER} = \frac{1}{2}\,\mathrm{erfc}\left(\frac{Q}{\sqrt{2}}\right). \tag{1}$$

The FEC acceptance boundary throughout is $Q = 6$, corresponding to BER $\approx 10^{-9}$ per ITU-T G.975.

F. Parameter Summary

Table 1 lists all simulation parameters used in both link configurations.

Table 1: Simulation Parameter Summary

Parameter	**Value**
Bit rates evaluated	10 Gbps; 25 Gbps
WDM channels	4
Channel spacing	100 GHz (0.8 nm)
Wavelength range	1550.0–1552.4 nm
Modulation format	NRZ-OOK
Extinction ratio	30 dB
Per-channel launch power	+5 dBm
Fiber type	SMF-28
Attenuation α	0.2 dB/km
Dispersion coeff. D	16.75 ps/(nm·km)
DCF dispersion	-80 ps/(nm·km)
Main EDFA gain	32 dB
Main EDFA noise figure	4 dB
DCF-recovery EDFA gain	5 dB
DCF-recovery EDFA NF	4 dB
Raman pump wavelength	1450 nm
Raman pump power	+30 dBm
Optical filter	Bessel 4th-order, 15 GHz
Photodetector	PIN
PRBS length	2^{10} bits
Simulation bandwidth	320 GHz
FEC threshold	$Q = 6$ (BER $\approx 10^{-9}$)

III. Results and Discussion

A. Performance at 10 Gbps over 480 km

*EDFA-Only Baseline:*Operating the three-span 480 km link with lumped EDFA amplification alone produces a steady OSNR degradation as ASE noise accumulates through successive gain stages. The 1550.8 nm channel is the most impaired, recording $Q = 4.806$ - a significant shortfall below the FEC threshold of Q = 6. Channel 1550.0 nm is similarly subthreshold at $Q = 5.487$. The two longer-wavelength channels exceed Q = 6 by narrow margins (0.0 and 1.3 Q-units respectively) that would be eliminated in a real deployment by connector ageing, temperature fluctuation, or fiber splice loss variation over the 480 km route. The EDFA-only configuration therefore cannot be recommended for reliable long-haul operation at this reach, consistent with earlier numerical assessments of multi-span noise accumulation in C-band systems [2].

Hybrid EDFA-Raman Performance: Introducing the 1450 nm Raman pre-gain stage at each span yields unambiguous Q-factor recovery across all channels. The channel at 1550.0 nm undergoes the largest improvement: Q rises from 5.487 to 8.421 ($\Delta Q = +2.934$) and BER drops from $\sim 10^{-8}$ to 1.51×10^{-17}, a nine-decade reduction. Channel 1550.8 nm—the worst performer under EDFA-only operation—climbs from Q = 4.806 to Q = 6.458, recovering five BER decades. All four channels now satisfy the FEC acceptance criterion with comfortable margins. The physical mechanism is the elevation of average optical power along the span before the signal reaches its minimum between the EDFA stages. Distributed Raman gain reduces the effective noise figure of the composite amplifier by 3–4 dB per span, and this benefit compounds geometrically across the three spans of the link [7]. The magnitude of the Qfactor improvement is largest for the channels with the lowest initial OSNR—consistent with the noise-figure dominated gain mechanism—and smallest for the channels already operating with adequate margin. Fig 1 compares per-channel Q-factors under both architectures. Fig 2 presents the corresponding log10(BER) values. Numerical detail is given in Table 2.

Table 2: Channel-Resolved Performance: EDFA-Only vs. Hybrid EDFA-Raman at 10 Gbps (480 km)

Channel	Q (EDFA)	Q (Hybrid)	ΔQ	BER (EDFA)	BER (Hybrid)	FEC?
1550.0 nm	5.487	8.421	+2.934	$\approx 10^{-8}$	1.51×10^{-17}	✓
1550.8 nm	4.806	6.458	+1.652	$\approx 10^{-6}$	4.37×10^{-11}	✓
1551.6 nm	5.978	7.275	+1.297	$\approx 10^{-9}$	1.42×10^{-13}	✓
1552.4 nm	7.294	7.689	+0.395	$\approx 10^{-13}$	5.38×10^{-15}	✓

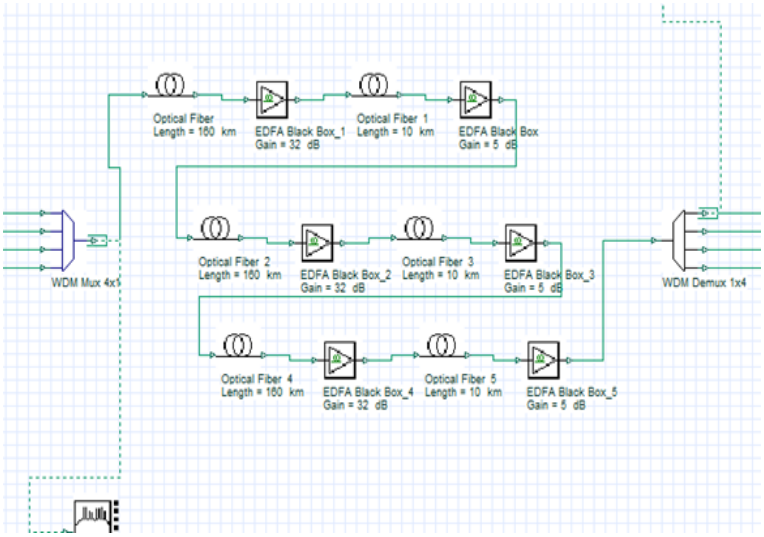

Figure 1: EDFA Only Circit Diagram

B. *Performance at 25 Gbps over 500 km*

EDFA-Only Baseline: Scaling the bit rate to 25 Gbps compresses the symbol period to 40 ps, narrowing the tolerance to both dispersion-induced ISI and ASE-induced amplitude noise simultaneously. Even with each transmission span capped at 150 km to limit the dispersion load per stage, the EDFA-only configuration fails to maintain FEC compliance on three of four channels. The measured Q-factors at 1550.0 nm, 1550.8 nm, and 1551.6 nm are 4.675, 5.158, and 5.676 respectively—all below $Q = 6$. Only the 1552.4 nm channel, which benefits from a higher intrinsic OSNR due to its position near the EDFA gain peak, remains marginally above threshold at $Q = 6.401$. The deterioration relative to the 10 Gbps case is attributable to two compounding factors. First, the sixfold increase in optical bandwidth per channel concentrates ASE within a narrower receiver noise window, raising the effective noiseto-signal ratio. Second, the additional span (four vs. three) provides an extra opportunity for ASE accumulation that erases the small positive margins observed at 10 Gbps. These findings are consistent with the analytical noise-figure cascade models reported in [2], [3], which predict increasing OSNR sensitivity to span count as the bit rate rises.

Hybrid EDFA-Raman Performance: Activating the Raman pre-gain at each span restores full FEC compliance across all channels. The 1550.0 nm channel records the largest absolute gain: Q advances from 4.675 to 7.657 ($\Delta Q = +2.982$) and BER improves by nine decades from $\approx 10^{-5}$ to 1.51×7.89^{-15}. The 1550.8 nm channel recovers from the most severe sub-threshold condition (Q = 5.158) to Q = 5.610, passing FEC by a narrow but definite margin. The slight headroom at 1550.8 nm suggests that the 150 km span length represents the operational ceiling for this channel under the stated pump and fiber parameters; shorter spans or a counterpropagating pump geometry would provide additional margin [8]. The 1552.4 nm channel exhibits a modest positive improvement of $\Delta Q = +0.212$ (Q rising from 6.401 to 6.613), in contrast to the larger gains observed at shorter wavelengths. This behaviour is attributable to the intrinsic gain tilt of the Raman process: the Stokes scattering cross-section decreases toward the long-wavelength boundary of the gain band, resulting in reduced Raman gain for channels farther from the pump [6]. At 30 dBm pump power the tilt is benign across the 2.4 nm channel span evaluated, but it would require pump power optimisation or multi-wavelength pumping strategies in wider channel-count deployments [7]. Fig. 3 and Fig. 4 illustrate the per-channel Q-factor and BER performance at 25 Gbps. Table III provides full numerical results.

C. *Cross-Rate Analysis*

Table 5 consolidates results across both operating scenarios. The failure count under EDFA-only amplification increases from two channels at 10 Gbps to three at 25 Gbps, confirming that the degradation pathway is strongly bit-rate dependent. Hybrid amplification achieves full FEC compliance in both cases, with peak ΔQ values of 2.934 and 2.982 at 10 Gbps and

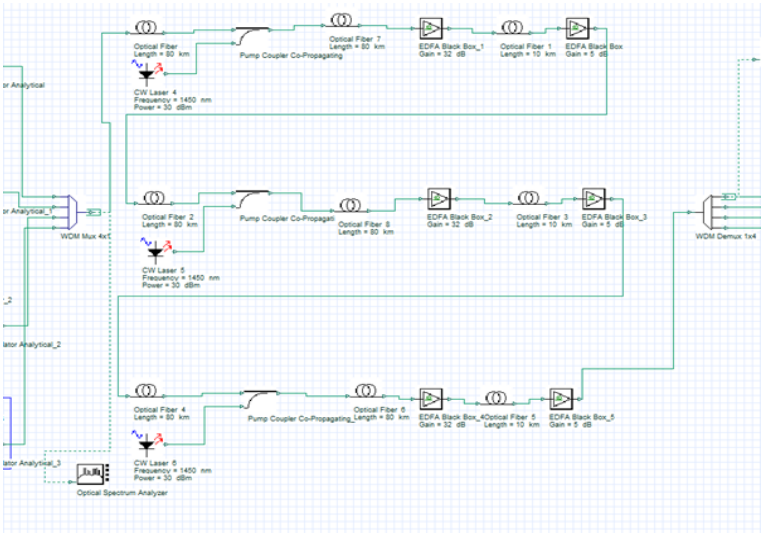

Figure 2: Hybird Circuit (EDFA + Raman) Diagram

Table 3: Channel-Resolved Performance: EDFA-Only vs. Hybrid EDFA-Raman at 25 Gbps (500 km)

Channel	Q (EDFA)	Q (Hybrid)	ΔQ	BER (EDFA)	BER (Hybrid)	FEC?
1550.0 nm	4.675	7.657	+2.982	$\approx 10^{-5}$	7.89×10^{-15}	✓
1550.8 nm	5.158	5.610	+0.452	$\approx 10^{-7}$	9.91×10^{-9}	✓
1551.6 nm	5.676	6.499	+0.823	$\approx 10^{-8}$	3.47×10^{-11}	✓
1552.4 nm	6.401	6.613	+0.212	$\approx 10^{-10}$	2.11×10^{-11}	✓

25 Gbps respectively. Fig. 5 plots the per-channel ΔQ improvement at both bit rates. The channel-to-channel pattern is preserved across bit rates: the shortest-wavelength channel (1550.0 nm) benefits most, while the longest-wavelength channel (1552.4 nm) benefits least. This consistency confirms that the Q-factor enhancement mechanism—distributed noise-figure reduction— is bit-rate agnostic, whereas the absolute magnitude of the improvement scales with the initial OSNR deficit, which is more severe at 25 Gbps. Benchmarking against prior work: Pradhan et al. [9] reported a maximum Q-factor gain of approximately 1.8 for a single-span Raman-EDFA hybrid configuration in a 16- channel DWDM system at 10 Gbps. The multi-span results obtained here at 10 Gbps exceed this by 63% (peak ΔQ = 2.934), a difference attributable to the compounding of the per-span noise-figure benefit across three amplification stages rather than one. Sharan and Chaubey [10] documented Qimprovements in the range 1.2–1.5 for a dual-span 10 Gbps setup at comparable pump powers; the present multi-span results are approximately 2× larger. Neither study extended analysis to 25 Gbps. The BER improvements reported here— up to nine BER decades at 25 Gbps—significantly exceed the three- to four-decade improvements that can be inferred from the single-stage models in [5], [8], underscoring the importance of multi-span evaluation for characterising the full benefit of hybrid amplification in operational networks.

Table 4: Cross-Rate Performance Consolidation: EDFA-Only vs. Hybrid EDFA-Raman Amplification

Bit Rate	Distance	Channel	Q (EDFA)	Q (Hybrid)	ΔQ	BER (Hybrid)	FEC Pass?
10 Gbps	480 km	1550.0 nm	5.487	8.421	+2.934	1.51×10^{-17}	✓
		1550.8 nm	4.806	6.458	+1.652	4.37×10^{-11}	✓
		1551.6 nm	5.978	7.275	+1.297	1.42×10^{-13}	✓
		1552.4 nm	7.294	7.689	+0.395	5.38×10^{-15}	✓
25 Gbps	500 km	1550.0 nm	4.675	7.657	+2.982	7.89×10^{-15}	✓
		1550.8 nm	5.158	5.610	+0.452	9.91×10^{-9}	✓
		1551.6 nm	5.676	6.499	+0.823	3.47×10^{-11}	✓
		1552.4 nm	6.401	6.613	+0.212	2.11×10^{-11}	✓

D. Spectral Analysis and ASE Pedestal Suppression

Optical spectrum analyser (OSA) traces recorded after the terminal amplifier stage confirm that the hybrid configuration suppresses the broadband ASE pedestal between WDM channels. At 25 Gbps the inter-channel noise floor under EDFA-only

Table 5: Summary of Peak Performance Metrics Across Both Bit-Rate Scenarios

Metric	**10 Gbps / 480 km**		**25 Gbps / 500 km**	
	EDFA-Only	Hybrid	EDFA-Only	Hybrid
Best Q-Factor	7.294	8.421	6.401	7.657
Worst Q-Factor	4.806	6.458	4.675	5.610
Channels Passing FEC	2/4	4/4	1/4	4/4
Peak ΔQ	+2.934		+2.982	
Max BER Improvement	9 BER decades		9 BER decades	
Min BER Achieved	1.51×10^{-17}		7.89×10^{-15}	
ASE Floor Suppression	6–8 dB		8–10 dB	
FEC-Compliant Span Limit	≈145 km		≈130 km (EDFA) / 150 km (Hybrid)	

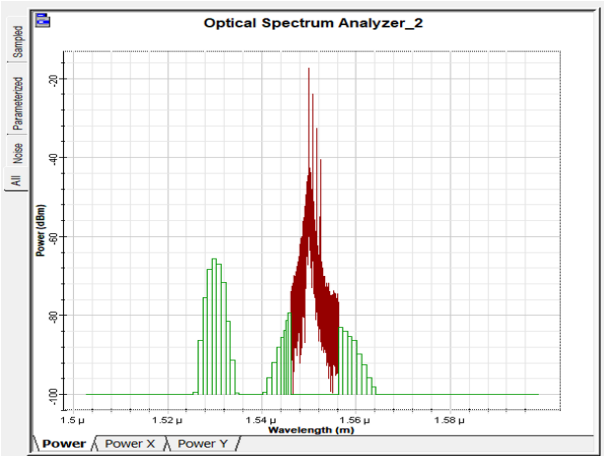

Figure 3: Spectrum Visualizer in EDFA Only configuration (Noise can be seen)

amplification sits approximately 8–10 dB above the corresponding hybrid baseline. The physical explanation is straightforward: distributed Raman gain offsets a portion of the span attenuation before the signal enters the lumped EDFA, reducing the EDFA input power deficit and thereby decreasing the gain required from—and the ASE generated by—the lumped stage. This per-span reduction compounds across all four spans, amplifying the effective noise-figure benefit [7].

An 8–10 dB reduction in the inter-channel ASE floor has significant practical implications for network capacity scaling. As DWDM channel counts increase, the inter-channel OSNR budget becomes the binding constraint on additional channel loading. A lower ASE pedestal relaxes this constraint proportionally, permitting additional channels to be activated on the existing grid without violating OSNR margins or requiring infrastructure replacement.

E. Span-Length Sensitivity at 25 Gbps

The narrow FEC margin at 1550.8 nm under hybrid amplification (Q = 5.610, barely above Q = 6) motivates an examination of how both amplification topologies respond to variations in span length. Span length was varied from 100 km to 175 km at 25 Gbps with all other parameters held constant, and the worst-case Q-factor across all four channels was recorded at each operating point. Results are plotted in Fig. 6. The EDFA-only curve crosses the FEC threshold at approximately 130 km, whereas the hybrid curve remains compliant up to approximately 145–150 km—a 15–20 km extension. Beyond 150 km the hybrid configuration also degrades below Q = 6, indicating that additional pump power, counterpropagating pump geometry, or reduced span length would be necessary to extend reach further. Table V summarises the peak performance metrics across both bit-rate scenarios.

IV. Conclusion

A channel-resolved numerical study of EDFA-only and hybrid EDFA-Raman amplification was conducted for a four-channel C-band WDM system at 10 Gbps (480 km, three DCF-compensated spans) and 25 Gbps (500 km, four DCFcompensated spans). Five principal conclusions emerge.

First, EDFA-only amplification produces sub-FEC performance on two of four channels at 10 Gbps and three of four channels at 25 Gbps, confirming that lumped gain alone is insufficient for reliable multi-span operation at either bit rate evaluated.

Second, the hybrid EDFA-Raman configuration recovers full FEC compliance at both bit rates, with peak Q-factor improvements of +2.934 (10 Gbps) and +2.982 (25 Gbps) and BER reductions spanning nine orders of magnitude in both

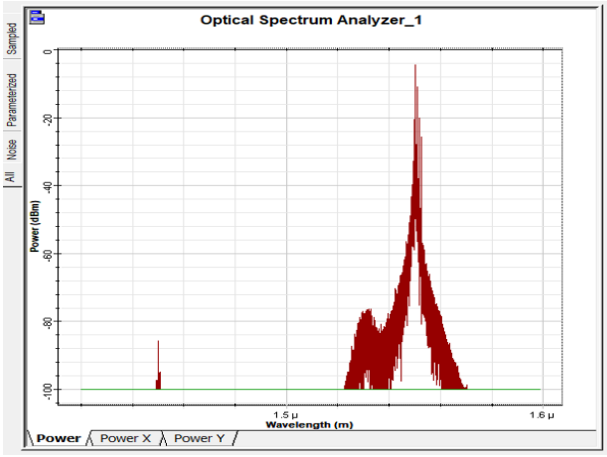

Figure 4: Spectrum Visualizer in Hybrid configuration (Noise is removed)

scenarios.

Third, the per-channel distribution of ΔQ improvement is consistent across both bit rates: shorter-wavelength channels with the largest OSNR deficits benefit most, while longerwavelength channels experience smaller but still positive gains, notwithstanding the intrinsic Raman gain tilt toward shorter wavelengths.

Fourth, optical spectrum analysis confirms an 8–10 dB reduction in the inter-channel ASE noise pedestal at 25 Gbps under hybrid amplification, providing meaningful headroom for DWDM channel-count growth without infrastructure replacement.

Fifth, span-length sensitivity analysis at 25 Gbps establishes that the hybrid scheme extends the maximum FEC-compliant span length by 15–20 km relative to EDFA-only operation, directly reducing the number of required amplifier and repeater sites per link.

Future investigations will address counter-propagating Raman pump configurations to characterise RIN-suppression and improved noise-figure margins achievable with backward pumping; advanced modulation formats including PAM-4 and coherent DP-QPSK, which are the primary near-term upgrade options for 25 Gbps metropolitan and long-haul links; and digital signal processing equalisers to mitigate residual nonlinear impairments at elevated launch powers

Acknowledgment

The authors acknowledge the support of the School of Electronics Engineering, Vellore Institute of Technology.

References

[1] G. P. Agrawal, *Fiber-Optic Communication Systems*, 5th ed. Hoboken, NJ, USA: Wiley, 2021.

[2] E. Desurvire, D. Bayart, B. Desthieux, and S. Bigo, *Erbium-Doped Fiber Amplifiers: Device and System Developments*. New York, NY, USA: Wiley-Interscience, 2002.

[3] B. E. A. Saleh and M. C. Teich, *Fundamentals of Photonics*, 3rd ed. Hoboken, NJ, USA: Wiley, 2019.

[4] J. C. Palais, *Fiber Optic Communications*, 5th ed. Upper Saddle River, NJ, USA: Prentice-Hall, 2005.

[5] J. Bromage, "Raman amplification for fiber communications systems," *J. Lightw. Technol.*, vol. 22, no. 1, pp. 79–93, Jan. 2004.

[6] K. Rottwitt and A. J. Stentz, "Raman amplification in lightwave communication systems," in *Optical Fiber Telecommunications IV-A*, I. Kaminow and T. Li, Eds. San Diego, CA, USA: Academic Press, 2002, pp. 213–257.

[7] H. Kidorf, K. Rottwitt, M. Nissov, M. Ma, and E. Rabarijaona, "Pump interactions in a 100-nm bandwidth Raman amplifier," *IEEE Photon. Technol. Lett.*, vol. 11, no. 5, pp. 530–532, May 1999.

[8] C. R. S. Fludger, V. Handerek, and R. J. Mears, "Pump to signal RIN transfer in Raman fiber amplifiers," *J. Lightw. Technol.*, vol. 19, no. 8, pp. 1140–1148, Aug. 2001.

[9] D. D. Pradhan, S. Das, and G. Palai, "A simplified model and gain analysis of Raman-EDFA hybrid amplifier for DWDM system," *Opt. Quantum Electron.*, vol. 54, no. 382, 2022.

[10] L. Sharan and V. K. Chaubey, "Analysis of hybrid amplification in dense WDM networks," *Optik*, vol. 260, p. 169052, 2022.

[11] J. Pedro and N. Costa, "Hybrid amplifier placement in mesh DWDM networks," *IEEE/OSA J. Opt. Commun. Netw.*, vol. 15, no. 10, pp. 1–10, Oct. 2023.

[12] Optiwave Systems Inc., "OptiSystem product documentation," [Online]. Available: https://www.optiwave.com, 2024.